LOFT LINE

Feel the Difference

TELESTEPS®

No.1 in telescopic work tools

MANY ADVANTAGES

SIMPLE

We have always been convinced that the best ladder is both short and long. The telescopic ladder is easy to pull out to the desired length and securing it before use is just as quick. When the red locking catches have unfolded under each rung, this indicates that the ladder is ready for use and can handle loads of up to 150 kg.

FLEXIBLE

Large loft hatches and heavy ladders that take up a lot of space are often a necessary evil. This does not hold true for a loft ladder from Telesteps. Not only is it easy to assemble and use, but it also takes up minimum space in the attic and requires a very small loft hatch. Heavy and cumbersome loftladders are yesterday's news!

SAFE & SMART

The reason for creating this niched product is the exact same reason for why we create all the small finesses and innovative features on all of our products – because a small and big ladder should be as easy to use as it is to stand on. The easy lock mechanism, the user-friendly design – pull the ladder gently and it's ready at your disposal; unlock the locking pins and gently push the ladder back up – Voila!

LOFT MINI

Art. no:	60324
No. of treads:	9
Tread width:	90 mm
Height, floor to hatch:	2,45 - 2,55 m
Min. hatch opening:	520 x 600 mm
Length, closed:	1 m
Weight:	13 kg

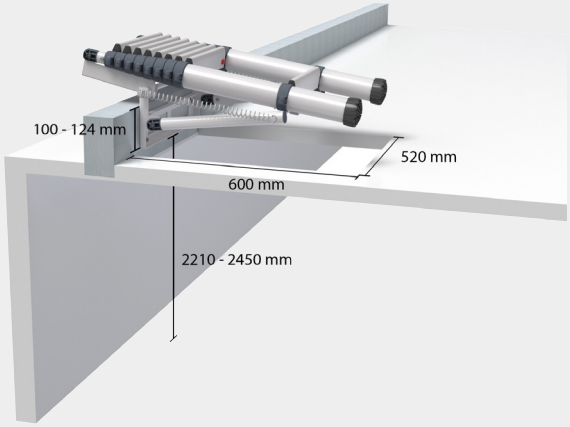

LOFT MAXI

Art. no:	60927
No. of treads:	10
Tread width:	90 mm
Height, floor to hatch:	2,52 - 3,00 m
Min. hatch opening:	520 x 920 x 1100 mm
Length, closed:	1 m
Weight:	15,5 kg

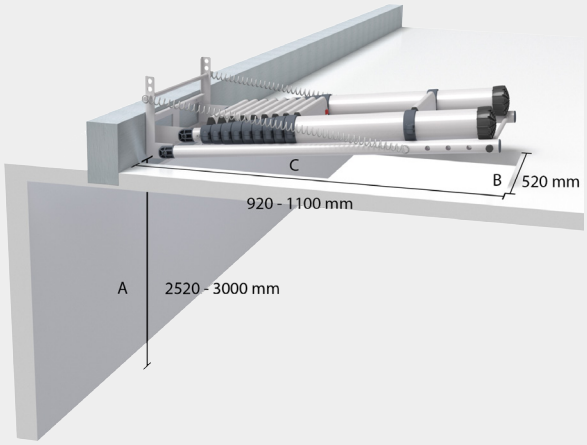

Minimum loft opening for Loft Maxi, 609 27

Installation area: Floor to lower edge of the fitting, **A**	**B**	**C**
2 520 - 2750 mm	520 mm	920 mm
2 700 - 2800 mm	520 mm	950 mm
2 750 - 2850 mm	520 mm	1000 mm
2 800 - 2900 mm	520 mm	1050 mm
2 850 - 3000 mm	520 mm	1100 mm

TELESTEPS®
No.1 in telescopic work tools

Registered Office:

Metalbox Holdings Ltd.
Unit 1, The Sir George Rooms,
Renishaw Hall, Park Hill, Eckington,
Derbyshire S21 3WB, UK.

Contact Details:

+44 (0) 1246 435337
info@metalboxltd.co.uk

WWW.METALBOXLTD.CO.UK